VRLA Separator/Pleater

Simplifies VRLA Glass Fiber Separator Folding and Insertion

The MAC VRLA Separator/ Pleater accurately marks and creases the glass fiber material used in sealed lead batteries.

One continuous piece of separator material is used for each cell element. The pleater "accordion" folds the material as the operator alternately inserts the negative and positive plates into the folds. This produces an element with open outside plates and a double layer of separator between the inside plates. When the proper number of plates have been inserted, the operator cuts the separator at the last fold and then sends the element to the next station. The operator then starts the cycle over to assemble another element.

The fold marking is performed by a set of wheels with alternating grooves and notches. The wheels (one with internal grooves and one with external grooves) are set at a pitch that precisely matches the plate height plus the fold width.

One set of pleating wheels are required for each different plate size. A roll of unpleated separator material is positioned on a spindle that is located behind the pleating wheels.

The material is "pulled" through the pleating wheels as they rotate in opposite directions. The timing of the wheels is adjustable, and the spacing between the pleating wheels can be adjusted. The pleating action alternately creases the top and underside of the separator material as it passes through the pleater wheels.

The wheels are simultaneously driven by gears driven by a variable-speed DC drive. Pleated separator material is then pulled through a hold-down latch at the operator station, and is ready for the insertion of plates.

The stacking table has a perforated top with a dust collection hood below the perforations to remove any lead dust. The built-in exhaust hood has an overhead light to assist operator. The exhaust hood and table has two 203.2 mm (8-inch) ducts ready to connect to the customer's plant ventilation system.

OPTIONAL EQUIPMENT:
An optional MAC Separator Caliper machine is available to measure and monitor the separator glass mat thickness. Measurement results are provided by using a known compressive force. A digital readout is standard for quick and accurate data measurement. This unit is a separate machine, and the instrument has a weight that is adjustable to apply a 10 Kpa (1.4505 psi) or load over a 10 cm^2 surface. The tester includes a steel weight, a digital indicator and an air-operated drive system.

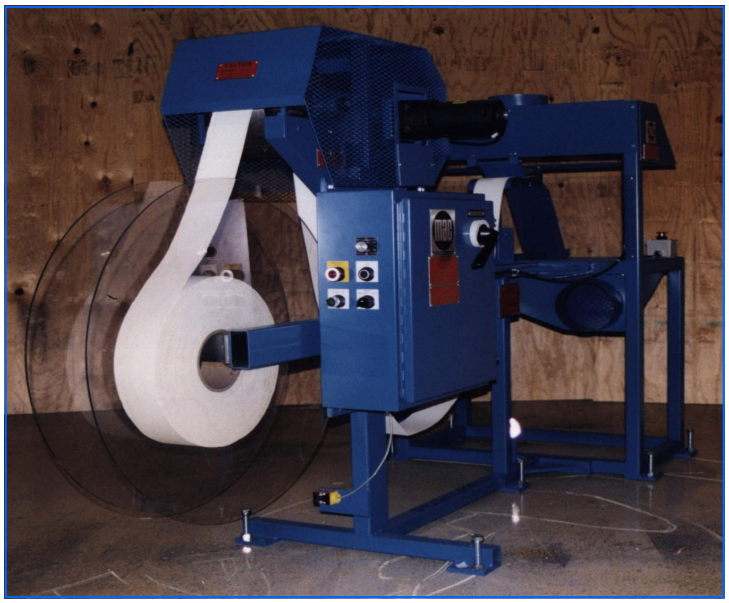

VRLA Separator/Pleater

TECHNICAL SPECIFICATIONS

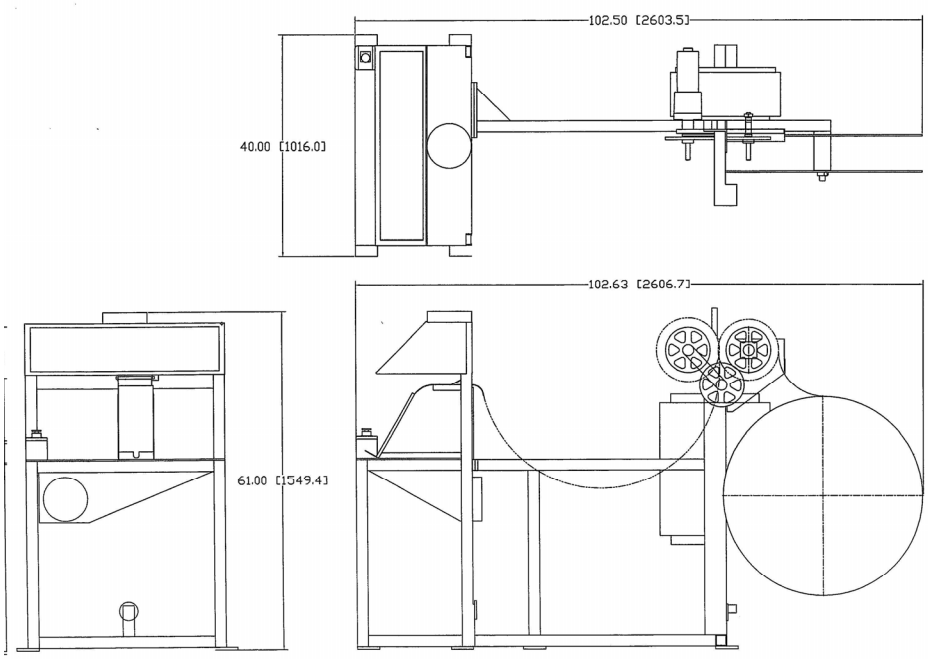

Required User Data:
Specify the electrical requirement
Specify the size of plates to be pleated
Specify the separator material including width dimension and thickness dimension

Foundation:
Standard 102 mm (4-inch) thick reinforced concrete floor or pad. Holes for lag bolting to floor are provided.

Production Rate:
2-6 elements per minute

Plate Handling Capability:
Plate thickness range – up to6.34 mm (0.25 inches) thickness dimension

Production Capabilities:
Separator width: Minimum - 50.8 mm (2 inches).
Maximum - 152.4 mm (6 inches,).
Separator length: Minimum -25.4 mm (1 inch).
Maximum – infinite up to the pleating wheel circumference

Operational Requirements: Personnel: One, semi-skilled

Standard Electrical: 120/480 volt, 1-phase, 60 Hz, 5/1.5 amp. Others available upon request.

Typical Electrical Consumption: 500 VA

Hydraulics/Water/Compressed Air/Gas: None

Ventilation: 203.2 mm (2-8 inch) diameter exhaust ducts to be attached to the customer ventilation system (as needed) to meet local requirements.

Approximate weight and dimensions:
317.5 kg (700 lbs.)
2616X1016X1549 mm (103X40X61 inches)

Helping to make the best batteries...yours.
MAC Engineering and Equipment Company, Inc.
2775 Meadowbrook Road, Benton Harbor, Michigan 49022, U.S.A.
Telephone: (269) 925-3295 or 1-800-756-8608 Fax: (269) 925-3305
e-mail: maceng@mac-eng.com
For a preview of our equipment visit: www.mac-eng.com